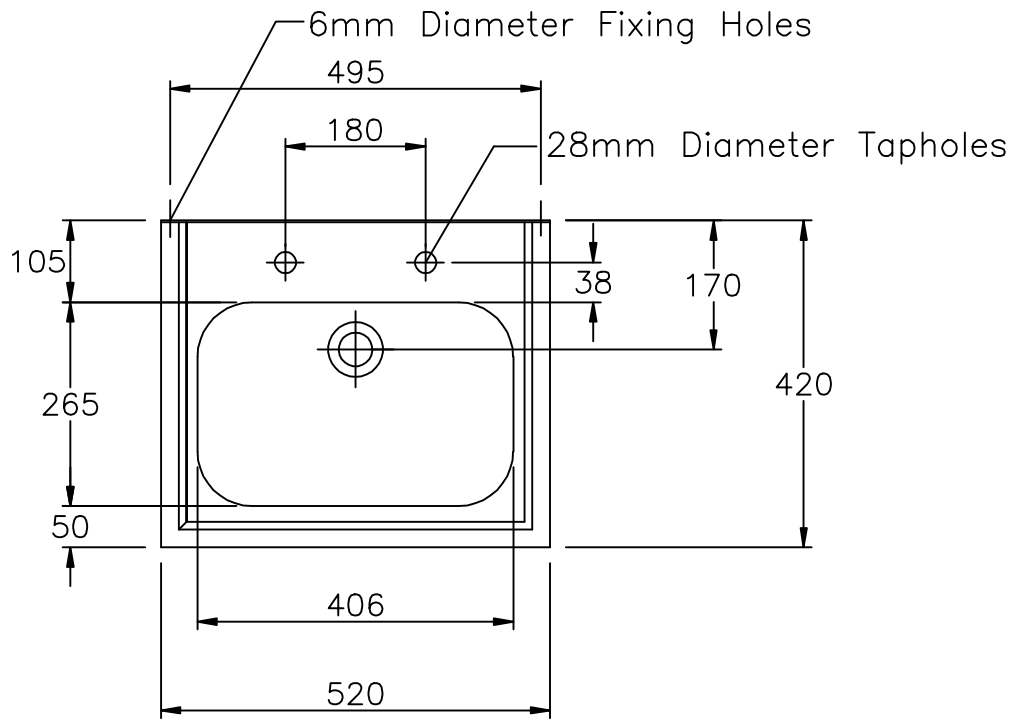
6mm Diameter Fixing Holes
495
180
28mm Diameter Tapholes
105
38
170
265
420
50
406
520

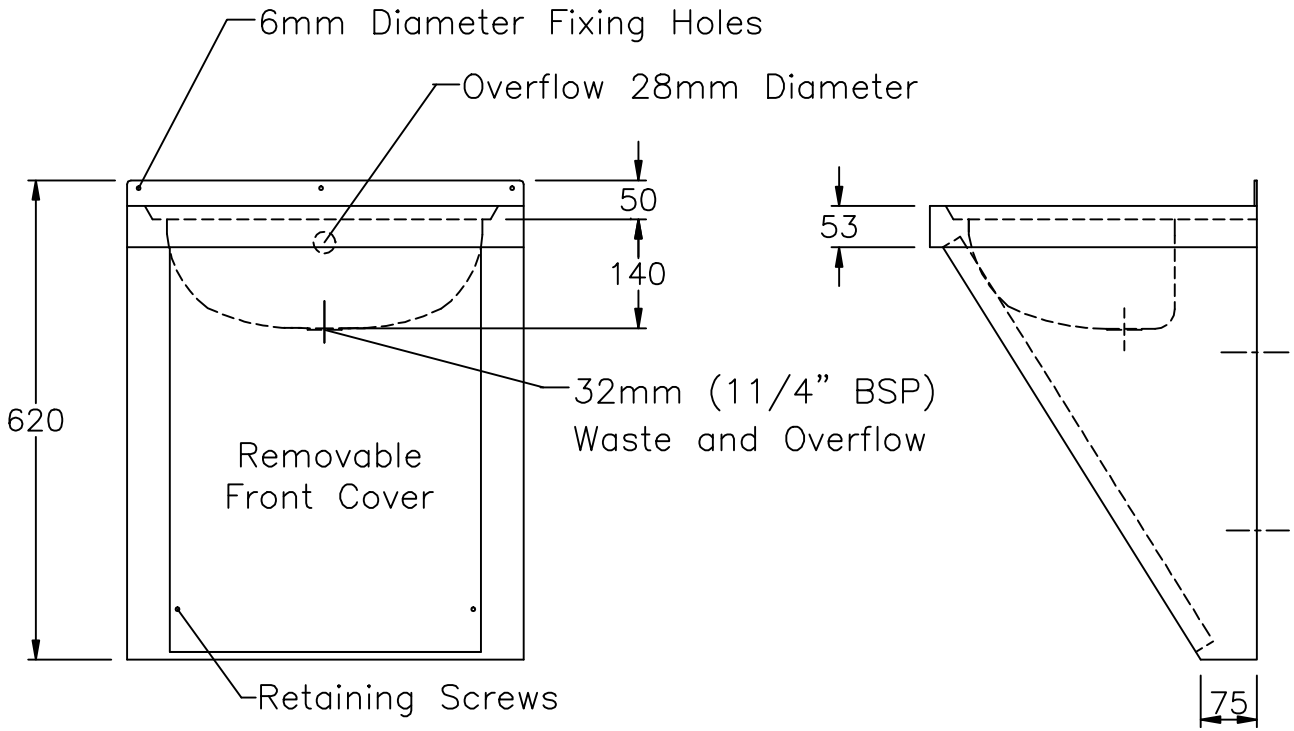
6mm Diameter Fixing Holes
Overflow 28mm Diameter
50
140
53
620
32mm (11/4" BSP)
Waste and Overflow
Removable
Front Cover
Retaining Screws
75